FALCM

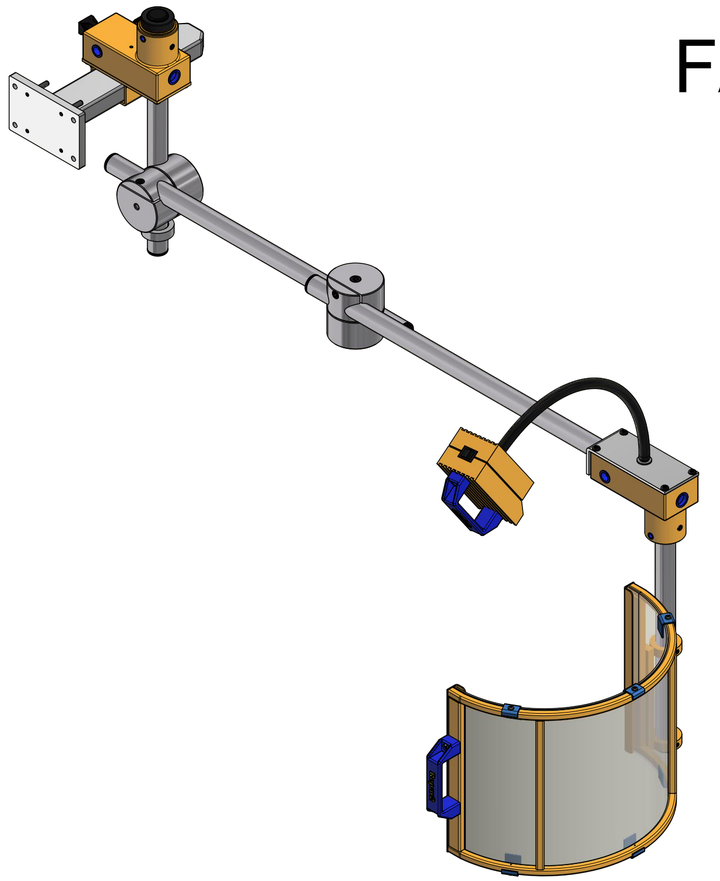

FBLCM

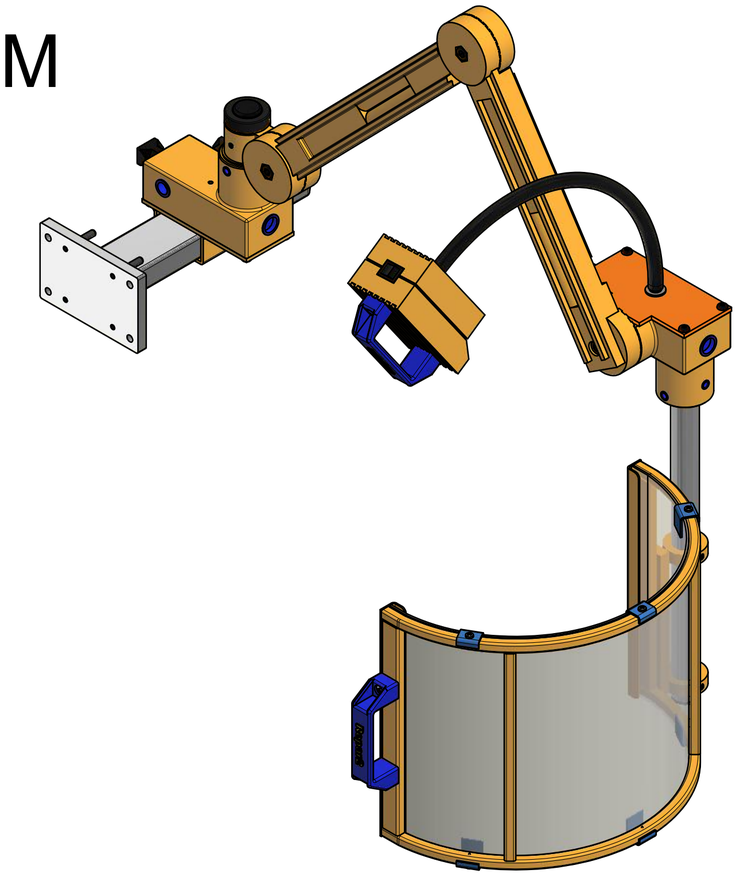

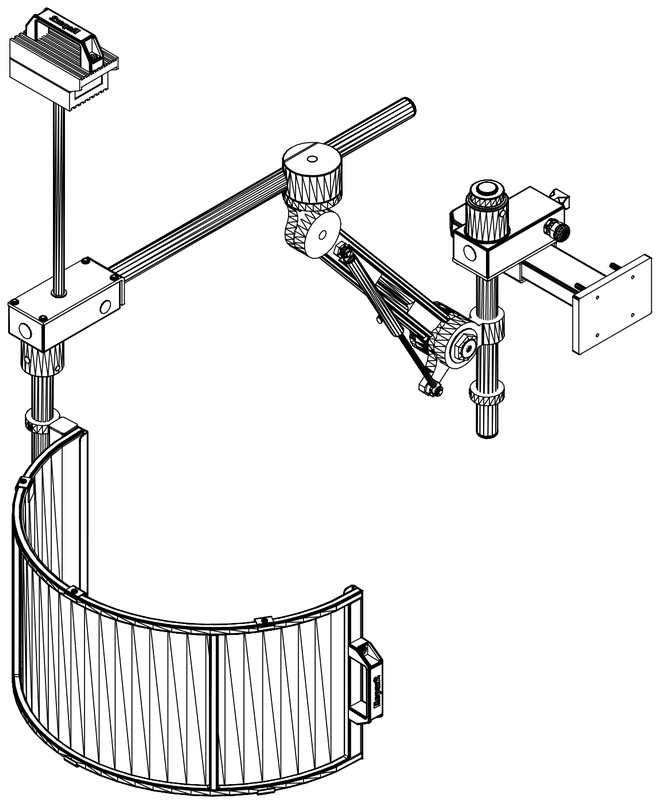

FABLCM

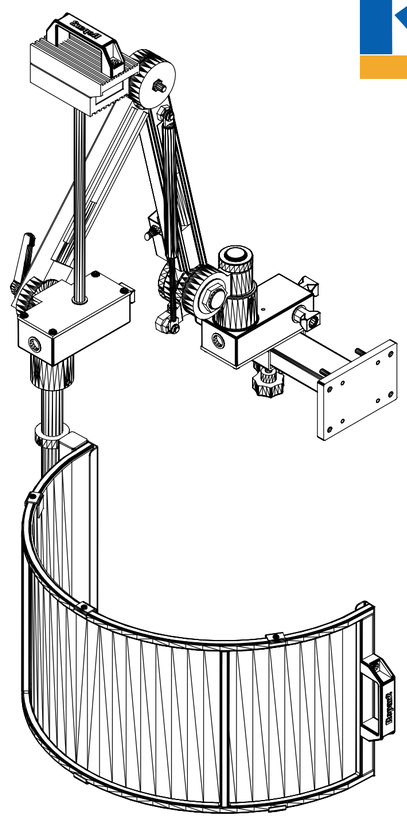

FBBLCM

Repar2 MACHINE GUARDS
Via Ambrogio Colombo, 176 - 21055 Gorla Minore (VA) Italy
Tel. +39 0331 465727 Fax: +39 0331 465728
www.repar2.com info@repar2.com
Exp.Dept: exportoffice@repar2.com

FBB FLATSCREEN

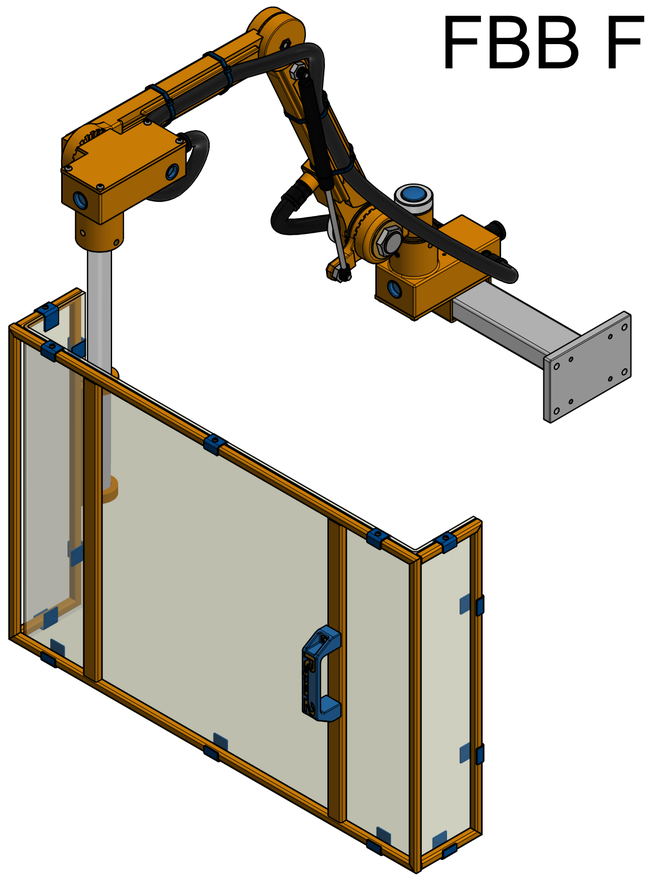

mod- FBB500F
mod- FBB600F

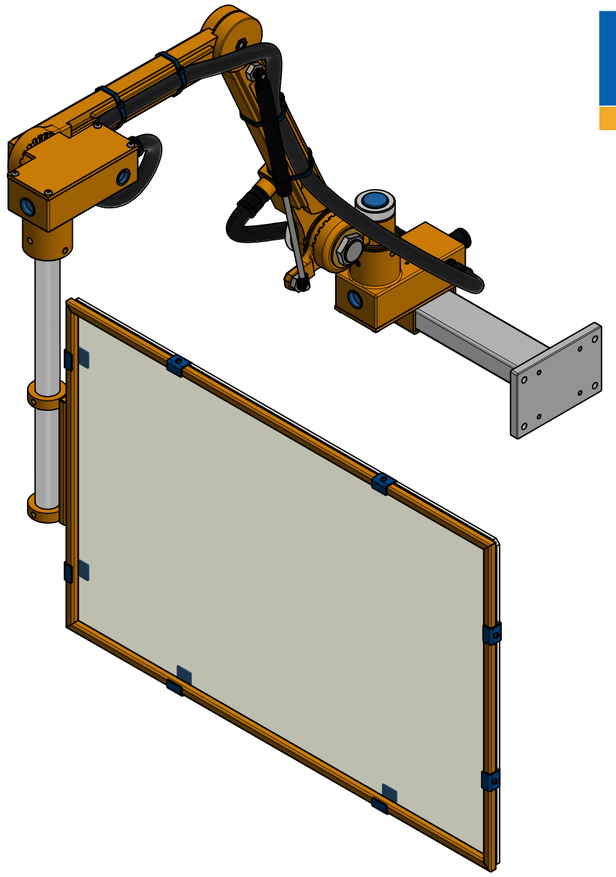

Repar2 MACHINE GUARDS
Via Ambrogio Colombo, 176 - 21055 Gorla Minore (VA) Italy
Tel. +39 0331 465727 Fax: +39 0331 465728
www.repar2.com info@repar2.com
Exp.Dept: exportoffice@repar2.com

mod- FBB500F-SL
mod- FBB600F-SL

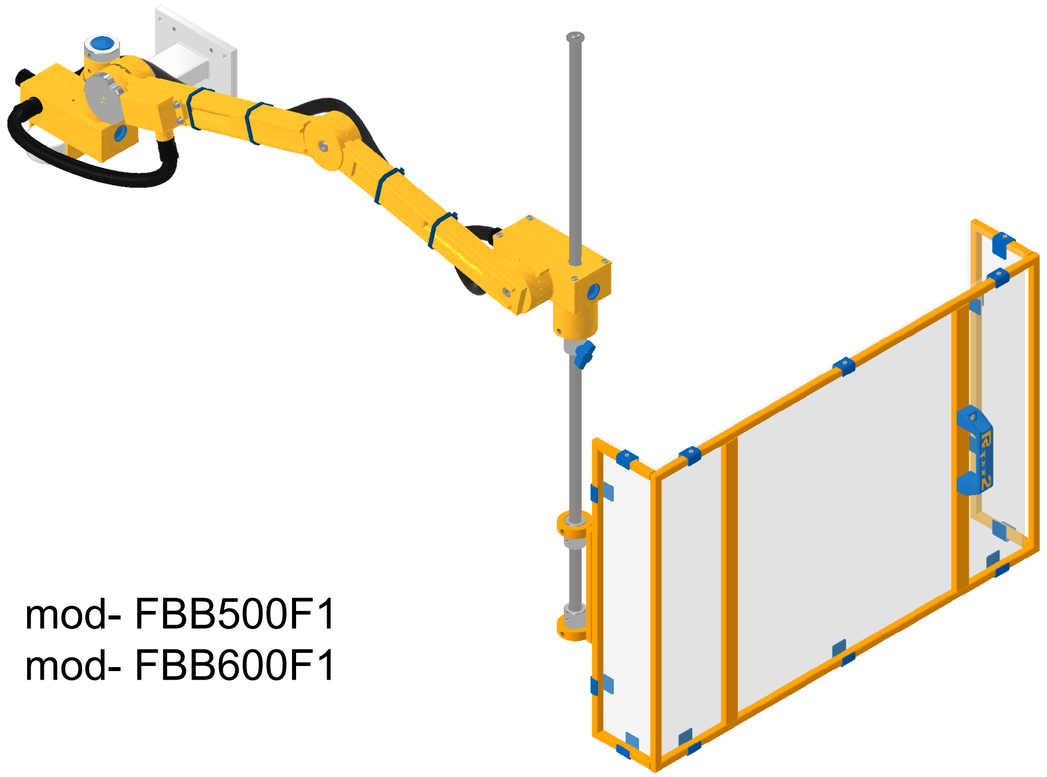

mod- FBB500F1
mod- FBB600F1

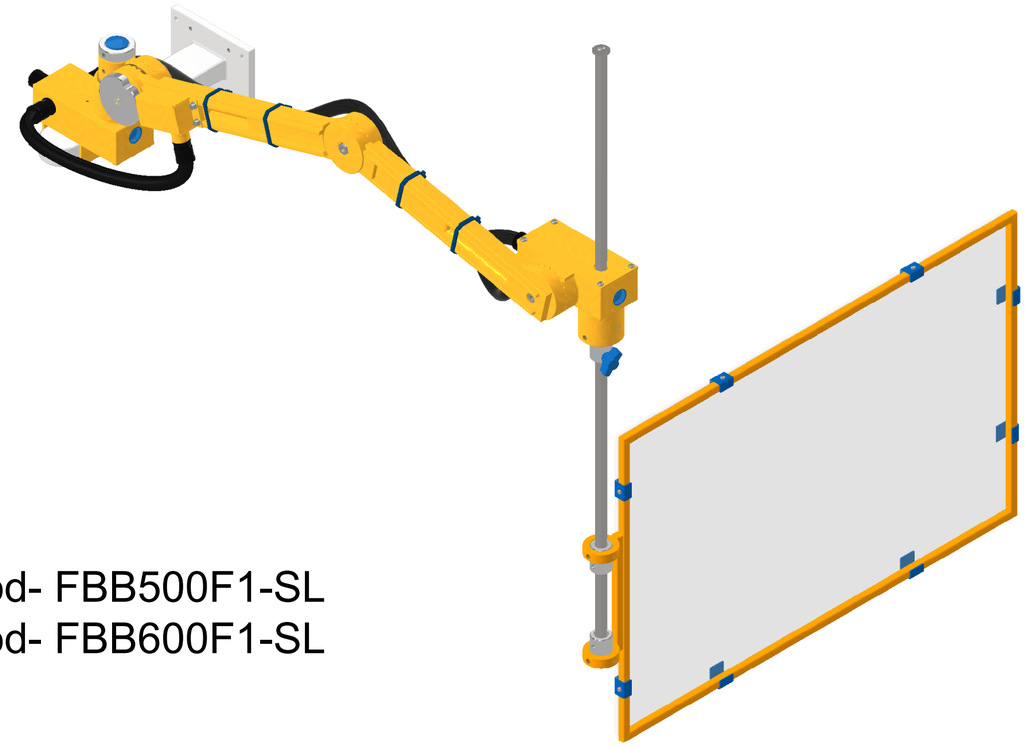

mod- FBB500F1-SL
mod- FBB600F1-SL