Via Ambrogio Colombo, 176 - 21055 Gorla Minore (VA) Italy
Tel. +39 0331 465727 Fax: +39 0331 465728
www.repar2.com info@repar2.com
Exp.Dept: exportoffice@repar2.com

Roll blinders for lathe lead-screw- Model AR

Fabric lenght/heght+Box Dimension

Pair of AR 1000 x H100	Box A60xB60xC170
Pair of AR 1500 x H150	Box A75xB75xC200
Pair of AR 2000 x H200	Box A75xB75xC275
Pair of AR 3000 x H250	Box A80xB80xC300

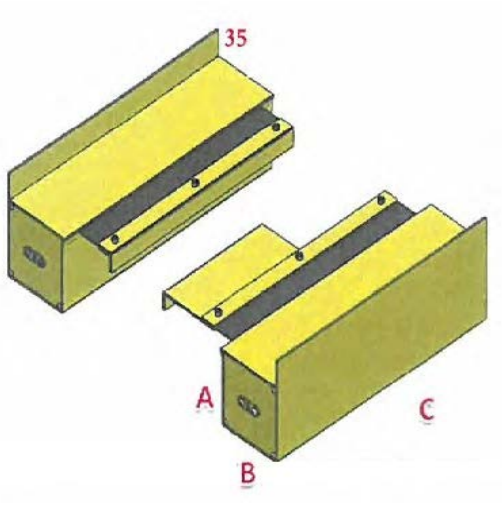

Pair of AR 4000 x H250	Box A105xB105xC300
Pair of AR 5000 x H250	Box A105xB105xC300
Pair of AR 4000 x H300	Box A105xB105xC400
Pair of AR 5000 x H300	Box A105xB105xC400
Pair of AR 6000 x H350	Box A140xB140xC450

Fabric lenght/heght+Box Dimension for LONG AR
Every supply includes 4 boxes and 2 fabric rolls

2 Pair of AR7000DB x H300H(Every AR side has 2 boxes)
Boxes A150 x B150 x C600
2 Pair of AR8000DB x H300 (Every AR side has 2 boxes)
Boxes A150 x B150 x C600

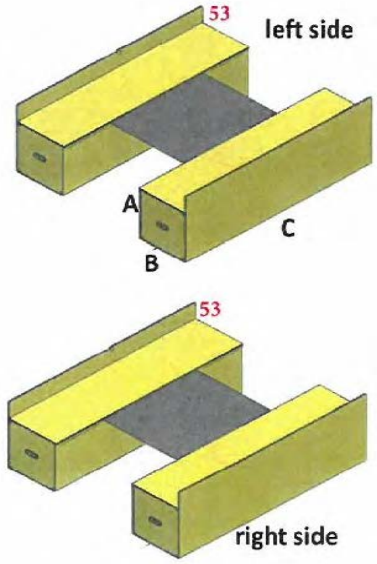

AVAILABILE FROM STOCK, subject to sale

Resale condicts: as usual

Via Ambrogio Colombo, 176 - 21055 Gorla Minore (VA) Italy
Tel. +39 0331 465727 Fax: +39 0331 465728
www.repar2.com info@repar2.com
Exp.Dept: exportoffice@repar2.com

Safety Guard AR in *ARAMIDE FIBRE*

Fabric insert: ***ARAMIDE FIBRE***
Coating: ***POLYURETHANE***
Thickness : ***0,4mm***
Color: ***black (outside)/dark grey(inside)***
Thermal resistance: ***Istantaneus contact : +250°C***
Continuos : -30°C/+125°C

Mean futures: ***resistance grease,oils and petroleum products,resistance to small spurts of incandescent material and to hot chips,abrasion resistence,adherence resistence***

MECHANICAL RESISTANCE: ***BENDING,PERFORATION,CUTTING,TRACTION***

FIREPROOF TISSUE: ***CLASS M2***